# EVOLVA 2003 SETTING DATA SHEET Ver1.00

| | | | | | | | |
|---|---|---|---|---|---|---|---|
| NAME | JOSH CYRUL | TEMP | 80 °F | ENGINE | SIRIO | MUFFLER | 2013 SIRIO |
| DATE | AUG. 1ST, 2004 | HUMIDITY | 30 % | HEAD CLEARANCE | .55 mm | FUEL TYPE | FANTOM |
| TRACK | SAN JOSE | TRACTION | HIGH % | PLUG No. | SIRIO #8 | RADIO | KO HELIOS |

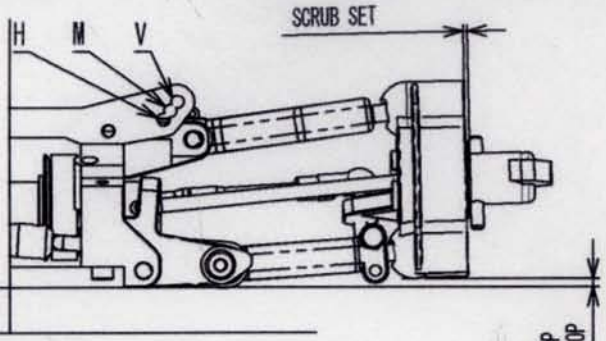


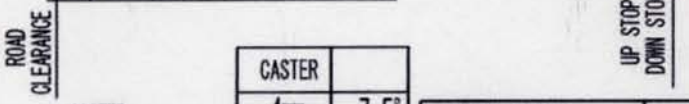


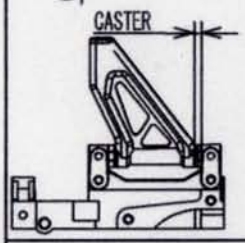


| CASTER | |
|---|---|
| 4mm | 7.5° |
| 3mm | 9° |
| 2mm | 11° |
| 1mm | 13° |
| 0mm | 14.5° |

| | |
|---|---|
| SERVO SAVER | 10 11 12 (13) |
| SERVO ANGLE | % |
| FRONT UPPER | (N) +1 +2 |
| KNUCKLE ARM SPACER | 0 mm |

| | |
|---|---|
| SHOCK OIL | 400 450 (500) 550 600 700 800 |
| DIAPRAGM | STANDARD |
| SHOCK PISTON | N 1.2 x 1 |
| SPRING | 1.8 1.9 (2.0) SILVER |
| SPRING ADJUSTER | mm |
| SHOCK POS | (H) M V |
| SCRUB SET | (0.5) 1.0 |
| CASTER ANGLE | 2 mm |
| CAMBER ANGLE 0G/1G | L 0 0.5 1 1.5 (2) 2.5 3 / R 0 0.5 1 (1.5) 2 2.5 3 |
| TOE ANGLE | 2° OUT |
| FRONT WIDTH | 253 mm |
| UP STOP | NONE mm |
| DOWN STOP | 0 mm |
| ANTIROLL BAR | ⊖ ⊘ ⊘ ⊘ (⊘) |
| TIRE HARDNESS | 32 35 (37) 40 |
| TIRE TYPE | (STANDARD) / MULTI |
| TIRE DIAMETER | ϕ 68 mm |
| ROAD CLEARANCE | 6 mm |

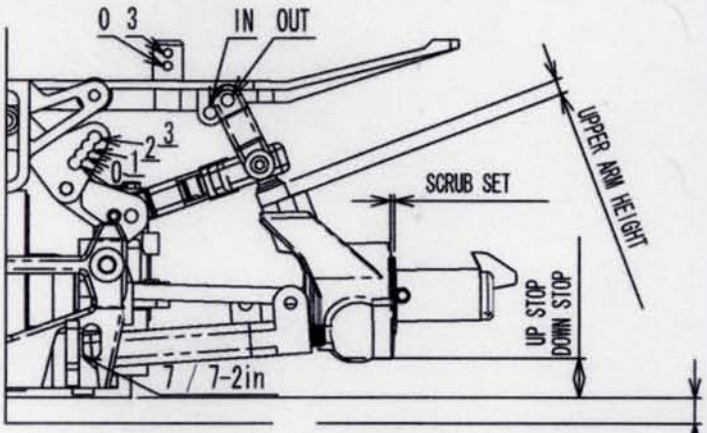


| GEAR | TOTAL | GEAR | TOTAL | GEAR | TOTAL | GEAR | TOTAL | GEAR | TOTAL |
|---|---|---|---|---|---|---|---|---|---|
| 15/47 | 7.52 | 15/48 | 7.68 | 15/49 | 7.84 | 19/44 | 5.56 | 19/45 | 5.68 |
| 16/47 | 7.05 | 16/48 | 7.20 | 16/49 | 7.35 | 20/44 | 5.28 | 20/45 | 5.40 |
| 17/47 | 6.64 | 17/48 | 6.78 | 17/49 | 6.92 | 21/44 | 5.03 | 21/45 | 5.14 |

| | |
|---|---|
| SHOCK OIL | 400 450 (500) 550 600 700 800 |
| DIAPRAGM | STANDARD + 2 O-RINGS |
| SHOCK PISTON | N 1.1 x 2 |
| SPRING | 1.8 (1.9) 2.0 BLUE |
| SPRING ADJUSTER | mm |
| SHOCK POS | 0 (1) 2 3 |
| SCRUB SET | 0.5 1.0 1.5 (2.0) |
| UPPER ARM | 4 mm (N) OUT |
| CAMBER ANGLE 0G/1G | L 0.5 1 1.5 2 2.5 (3) 3.5 / R 0.5 1 1.5 2 2.5 (3) 3.5 |
| TOE ANGLE | 2.5° |
| REAR WIDTH | 263 mm |
| UP STOP | NONE mm |
| DOWN STOP | 9 mm |
| ANTIROLL BAR | ϕ3 / (⊖) |
| TIRE HARDNESS | 32 35 (37) 40 |
| TIRE TYPE | (STANDARD) / MULTI |
| TIRE DIAMETER | ϕ74.5 mm |
| ROAD CLEARANCE | 7 mm |
| SUS HOLDER | 7 / (7-2in) |
| BODY | DELTA LOLA |
| BODY POSITION | 7 mm |
| REAR SPOILER | 4 mm |

| | | | |
|---|---|---|---|
| CLUCH TYPE | (3D) 4D | PINION GEAR | 15 16 (17) 18/19 (20) 21 22 |
| CLUCH SHOE | N RED (GREY) | SPUR GEAR | 47 48 (49) / (44) 45 |
| HUGAL SHOE | N STANDARD | DRIVE RATIO | 7mm Difference 26/18 (420 BELT) |
| CLUCH SPRING | STANDARD | | |
| CLEARANCE | .4 mm | BODY MOUNT POS | (IN) / OUT |
| ADJ. NUT | 3.1 mm | BODY MOUNT HEIGHT | (0) / 3 |

MEMO SET-UP FROM 2004 ROOK NATIONALS